# Vendo® Engineering 510/516 72"Uni-1 3D *Narrow Column Set Up Guide*

**Size: 8.3-8.4oz /246-250ML 2.09 x 5.19 (53mm x 131.8mm)** **Rev. B** **Date 03/25/02**
**Pkg. Description/Type: ENERGY DRINKS - CANS**
**Franchise: GENERIC** **KIT#1122535**

## Column Setup

| Cam Setting | Back Spacer | Anti-Theft Rod & Clip(***) | Gage Bar Clip Location | Gage Bar Location | Magnetic Column Spacer (**) | Side Spacer | Sold Out Flap (*) | Sold Out Spacer |
|---|---|---|---|---|---|---|---|---|
| 2 | 5 | 389693<br>387450 | E/#2 | #3 | 1<br>1114348-3 | 1122166-2<br>Loc. #2 | Short<br>1083449 | 1077457 |

**Note:To properly vend product the Uni-1must have the columns set up as illustrated. *Install spring on right (Low Tension) side The 250ml product must be vended on the right side of mixed product. (Jam will occur if adjacent right gage bar is in slot #1) **Install magnetic column spacer into right side of partition above product side spacer and product slides (See Figure 1 for installation detail). *** Install anti theft rod in lower hole if product is vended in far left column.**

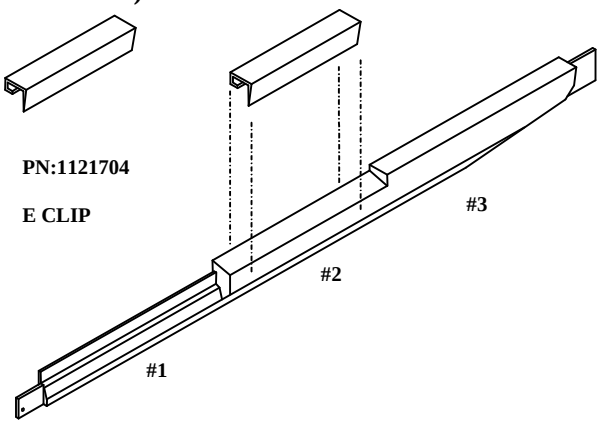


**Gage Bar Clip Location**

**PN:1114348-3**

**Column Spacer**

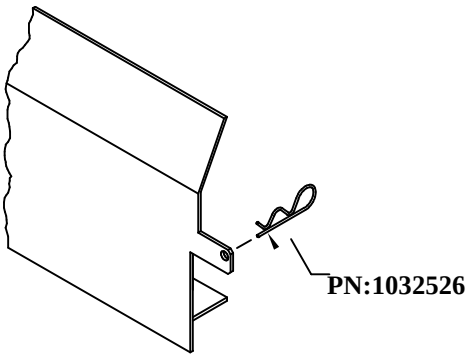


**PN:1122166-2**

**Spacer**

## Set Up Guide

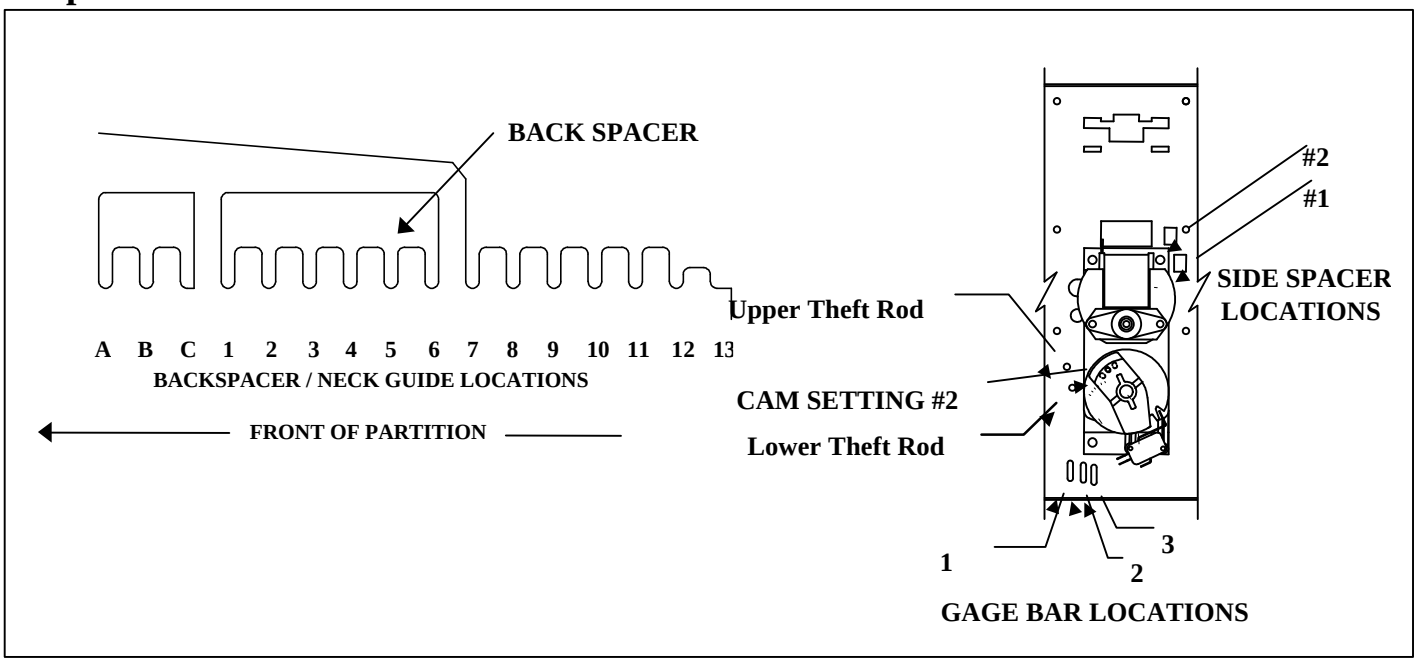


*FOR OTHER PRODUCT SET-UP GUIDES, CONTACT THE VENDO COMPANY.*
*TEL: (559) 439-1770 FAX: (559) 650-3455.*

**Installation Instruction #1122536**

***<u>Caution:</u> Disconnect power cord from power source before beginning installation***

**<u>Installation (see Figure 1)</u>**

**Step #1** Locate Back Spacer into position #5.

**Step #2** Install .74 product side spacer (P/N1122166-2).

**Step #3** Install pkg. of one 31.8” long magnetic foam pad (P/N1114348-3) on the right side partition. Locate pad in center as shown in Figure 1 above the .74 product side spacer (P/N1122166-2)

**Step #4** Install single column slider on middle and lower horizontal cross partition strap. (P/N1038036).

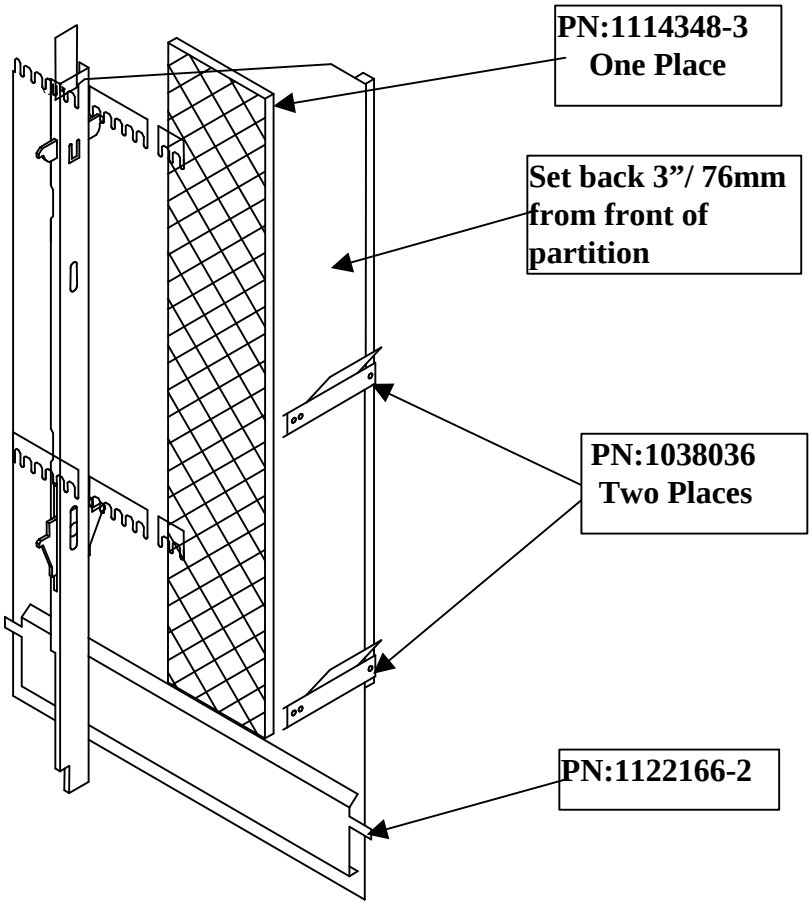


**Figure 1**

**Right Side Partition**