# Vendo® Engineering *Uni-1 2D Wide Column Set Up Guide*

**Size: 8.3-8.4oz /246-250ML 2.09 x 5.19 (53mm x 131.8mm)** **Rev. B** **Date 03/25/02**
**Pkg. Description/Type: ENERGY DRINKS - CANS**
**Franchise: GENERIC** **KIT#1122533**

## Column Setup

| Cam Setting | Back Spacer | Anti-Theft Rod & Clip(***) | Gage Bar Location | Product Slider (**) | Side Spacer | Sold Out Flap (*) | Sold Out Spacer |
|---|---|---|---|---|---|---|---|
| 2 | 5 | 389091<br>387450 | #1 Front<br>#2 Back | 1<br>389610 | 388996<br>Loc. #1 | Short<br>1083449 | 1077457 |

**Note:To properly vend product the Uni-1 must have the columns set up as illustrated. *Install spring on right (Low Tension) side**
****Product Slide: Remove the two (2) screws from the lower strap and install the slide with the ramp facing the column.**
*****Anti-Theft Rod 389091 and Clip 387450: First insert the rod into the round hole located on the rear mech, then bring it toward into the same hole that aligns with the front mech plate, and add the keeper.**

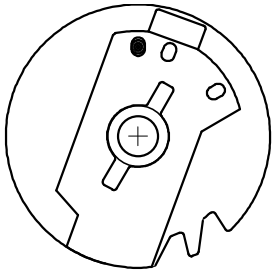

**Setting # 2**
**Double Depth**
**Narrow Product**
**PN:388999, 389000**

**Cam & Retainer**

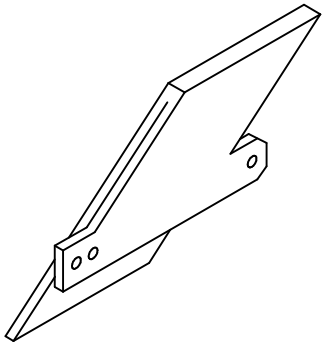

**PN:389610**

**Lower Front Strap Slider**

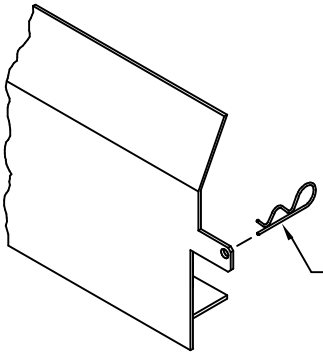


**PN:388996**

**Spacer**

## Set Up Guide

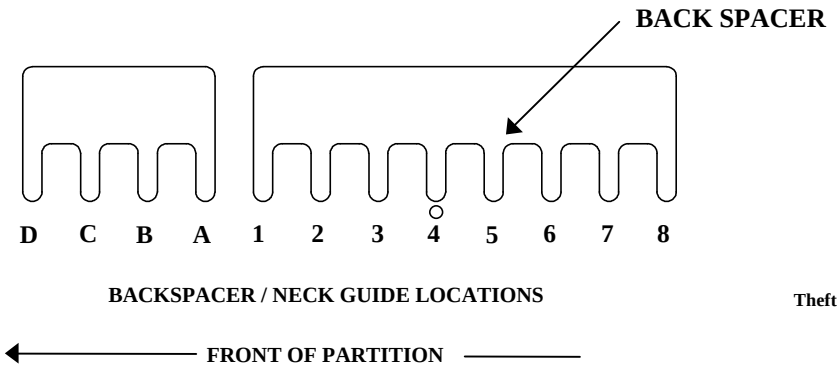


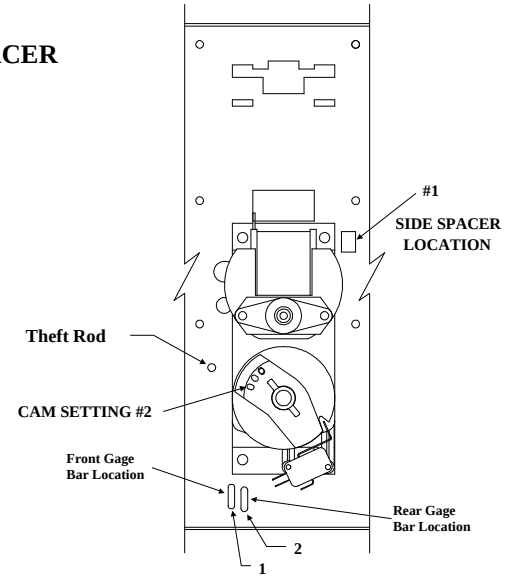


*FOR OTHER PRODUCT SET-UP GUIDES, CONTACT THE VENDO COMPANY.*
*TEL: (559) 439-1770 FAX: (559) 650-3455*

**Installation Instruction #1122534**