# Vendo® Engineering *Uni-1 2D Narrow Column Set Up Guide*

**Size: 8.3-8.4oz /246-250ML 2.09 x 5.19 (53mm x 131.8mm)** **Rev. B** **Date 03/25/02**
**Pkg. Description/Type: ENERGY DRINKS - CANS**
**Franchise: GENERIC** **KIT#1122531**

## Column Setup

| Cam Setting | Back Spacer | Gage Bar Location | Slider Lower Strap (**) | Side Spacer | Sold Out Flap (*) | Sold Out Spacer |
|---|---|---|---|---|---|---|
| 2 | 5 | #1 Front<br>#2 Back | 1<br>1038036 | 388996<br>Loc. #1 | Short<br>1083449 | 1077457 |

**Note:To properly vend product the Uni-1 must have the columns set up as illustrated. *Install spring on right (Low Tension) side**
**The 250ml product must be vended on the right side of mixed product.**
****Product Slide: Remove the two (2) screws from the lower strap and install the slide with the ramp facing the column.**

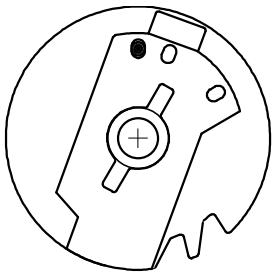

**Setting # 2**
**Double Depth**
**Narrow Product**
**PN:388999, 389000**

**Cam & Retainer**

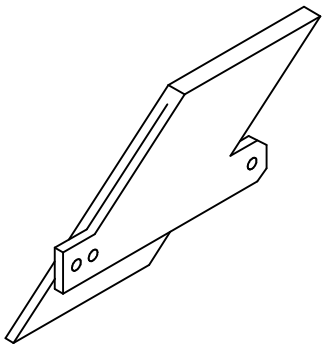

**PN:1038036**

**Lower Front Strap Slider**

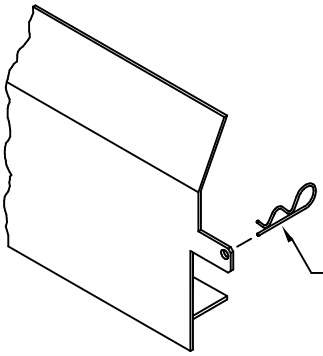


**PN:388996**

**Spacer**

## Set Up Guide

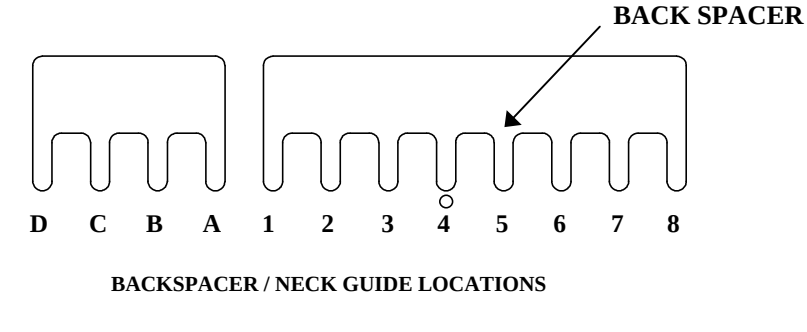


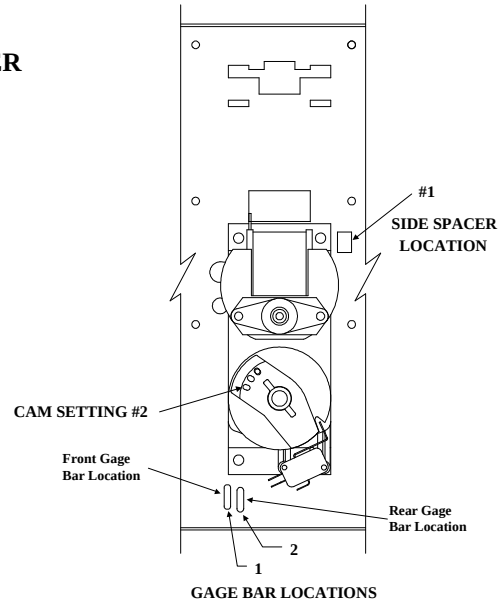


*FOR OTHER PRODUCT SET-UP GUIDES, CONTACT THE VENDO COMPANY.*
*TEL: (559) 439-1770 FAX: (559) 650-3455*

**Installation Instruction #1122532**